DOOR SCHEDULE

DOOR NO.	ROOM DESCRIPTION	DOOR SIZE	DOOR TYPE	FRAME TYPE	HEAD DETAIL	JAMB DETAIL	FIRE RATING	REMARKS	DOOR
100	MAIN ENTRY	(PR.) 3'-0" X 7'-0" x 1 3/4"	B	ALUM-1	H1/ A5-01	J1	---	EQUIP w/POWER DOOR OPERATOR - SEE SPECS	100
101	NOT USED							NOT USED	101
102	RETAIL EXIT	3'-0" X 7'-0" X 1¾"	C	HM-1	H2	J2	---	PANIC HARDWARE	102
103	WAREHOUSE DOOR	3'-0" X 7'-0" X 1¾"	A	HM-1	H3	J3	---	FRAME SET IN 7 1/4" WALL	103
104	BREAK ROOM	3'-0" X 7'-0" X 1¾"	A	HM-1	H3	J3	---		104
105	MEN'S TOILET	3'-0" X 7'-0" X 1¾"	A	HM-1	H3	J3	---		105
106	WOMEN'S TOILET	3'-0" X 7'-0" X 1¾"	A	HM-1	H3	J3	---		106
107	MANAGER'S OFFICE	3'-0" X 7'-0" X 1¾"	A	HM-1	H3	J3	---		107
108	WAREHOUSE EXIT	3'-0" X 7'-0" X 1¾"	C	HM-1	H2	J2	---	PANIC HARDWARE - SIMILAR A4-04	108
109	LOADING AREA	3'-0" X 7'-0" X 1¾"	C	HM-1	H2	J2	---		109
109A	OVERHEAD DOOR - LOADING	8'-0" X 8'-0" X Mftr	D	BY MFTR	A6-10	A6-10	---	SEE SPECS	109A
110	MAINTENANCE ROOM	3'-0" X 7'-0" X 1¾"	A	HM-1	H3	J3	---		110

WINDOW SCHEDULE

MARK	DESCRIPTION	HEAD	JAMB	SILL	REMARKS
A	ALUM. CURTAIN WALL SYSTEM	A5-01	A6-05	A5-01	
B	ALUM. CURTAIN WALL SYSTEM	A4-01	SIM A6-05/07	A4-01	PROVIDE BRICK SILL
C	ALUM. CURTAIN WALL SYSTEM	SIM A5-01	SIM A6-05	SIM A5-01	
D	ALUM. STOREFRONT	A4-05	A6-05	A4-05	PROVIDE BRICK SILL
E	ALUM. STOREFRONT	A4-06	A4-07	A4-06	SECURITY GLAZING - WAREHOUSE LOCATION
F	ALUM. STOREFRONT	A4-06	A4-07	A4-06	SECURITY GLAZING - WAREHOUSE LOCATION

WINDOW NOTES:

TYPICAL UNLESS NOTED OTHERWISE,
EXTERIOR GLAZING SHALL BE 1" INSULATED GLASS UNIT:

1"
- 1/4" TINTED FOAT GLASS
- ½" AIR SPACE.
- 1/4" LOW "E"

w/ THERMALLY-BROKEN FRAME DESIGN
*TINTED GLAZING - SEE SPEC SECTION 08800
SEE SECTIONS and SPECIFICATIONS
ALL GLAZING SHALL BE CATEGORY II - SAFETY GLAZING

WINDOWS LOCATED IN THE WAREHOUSE
SHALL BE GLAZED WITH 9/16" SECURITY IMPACT INSULATED GLASS UNIT:

9/16"
- 1/4" HEAT STRENGTHENED OUTBOARD LITE
- .015 ALIPHATIC URETHANE LAMINA.
- .70 POLYCARBONATE
- .050 ALIPHATIC URETHANE LAMINA.
- 1/4" HEAT STRENGTHENED INBOARD LITE

w/ THERMALLY-BROKEN FRAME DESIGN
SEE SECTIONS and SPECIFICATIONS

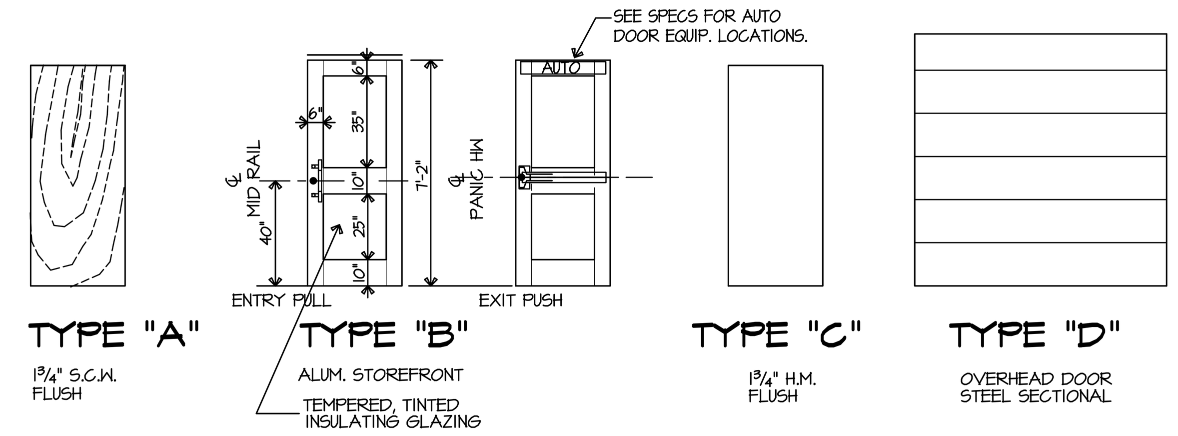

A6-01 DOOR TYPES

SCALE: 1/4" = 1'-0"

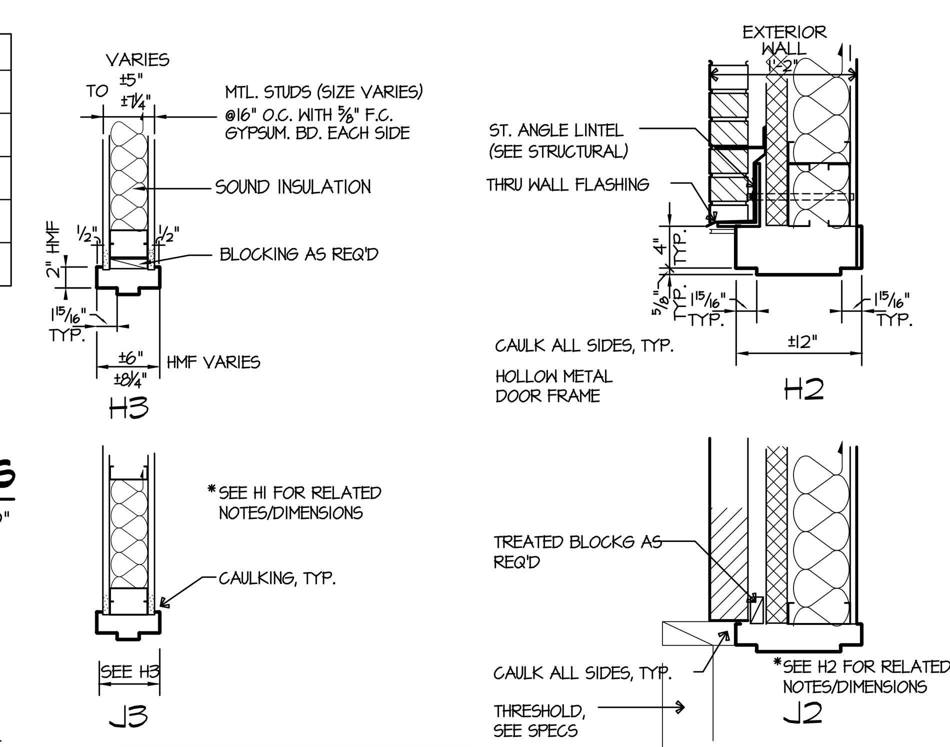

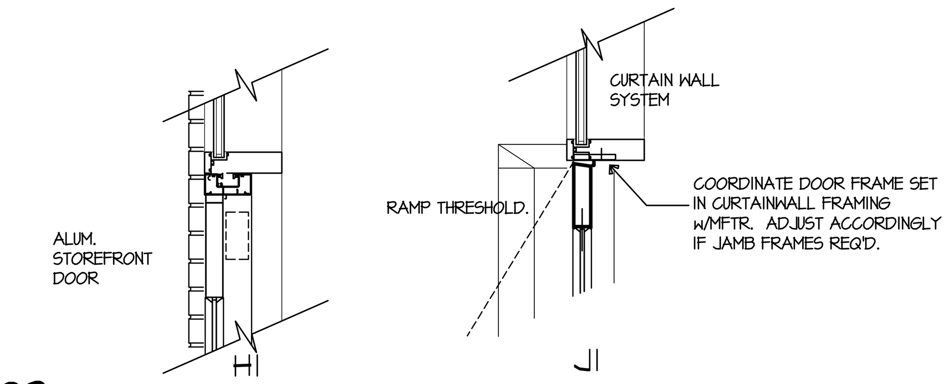

NOTE:
ALL HM FRAMES SHALL BE "WRAP-AROUND" FRAMES. HEAD/JAMB DIMENSION SHALL BE MODIFIED TO WRAP WIDTH OF WALL, AS INDICATED.

A6-02 DOOR HEAD/JAMB

SCALE: 1" = 1'-0"

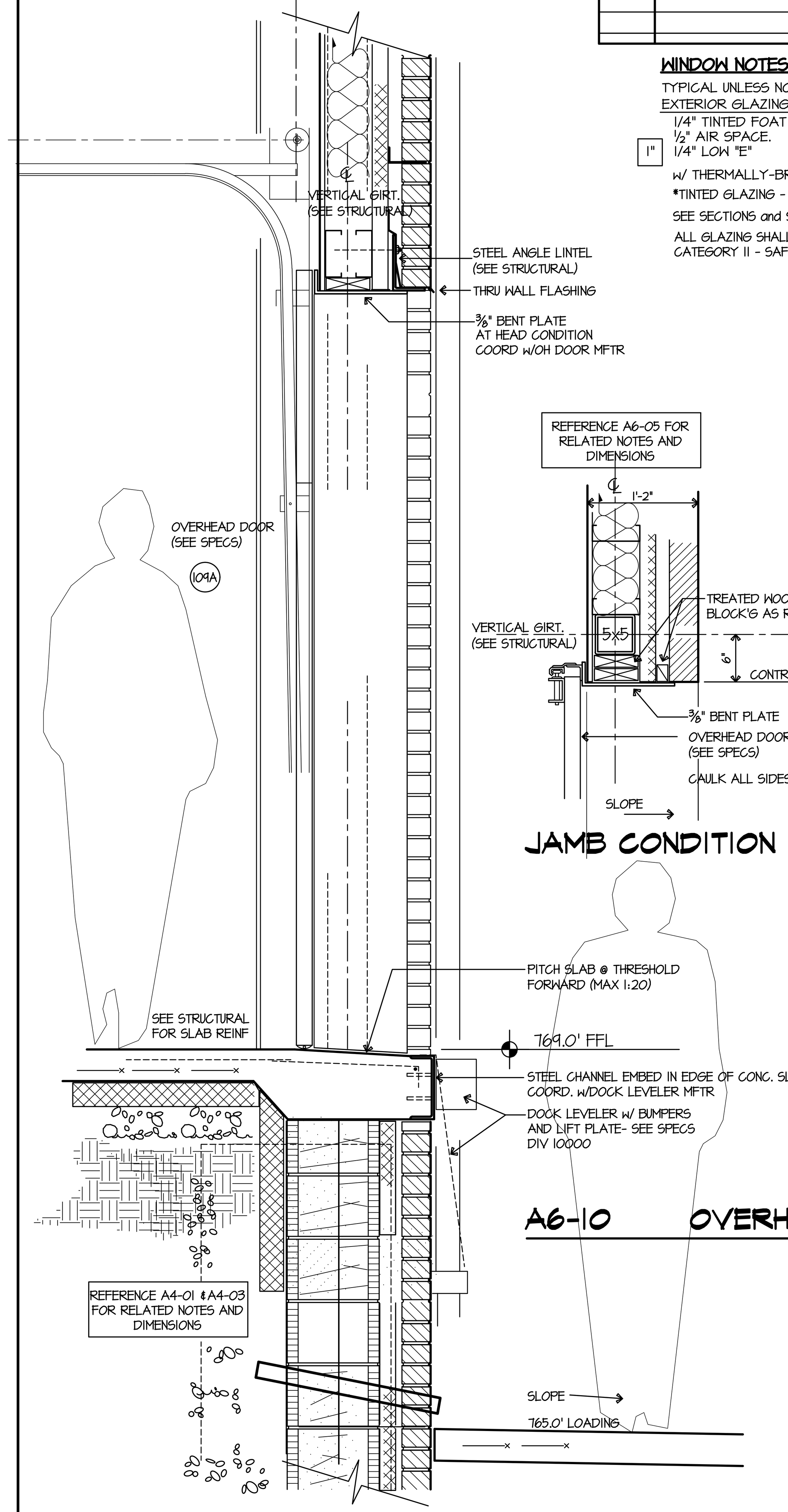

LOADING DOCK

A6-10 OVERHEAD DOOR

SCALE: 1" = 1'-0"

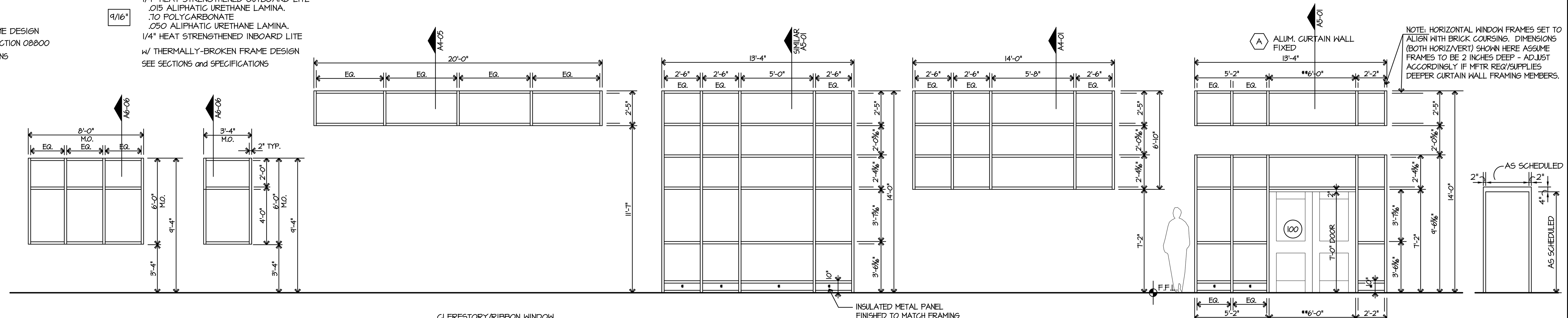

A6-03

EXTERIOR - ALUM. WINDOWS
WINDOW TYPES

SCALE: 1/4" = 1'-0"

TYPE ALUM-1
ALUMINUM STOREFRONT FRAME
**COORDINATE DOOR FRAME SET IN CURTAINWALL FRAMING w/MFTR. DIMENSIONS SHOWN HERE ASSUME A 2" HEAD FRAME REQ'D. ADJUST ACCORDINGLY IF JAMB FRAMES REQ'D.

TYPE HM-1
HM FRAME

CANOPY MFTR SHALL COORDINATE THE CONNECTION OF THE CANOPY TO THE STRUCTURE w/OTHER TRADES. ANY MISC STEEL REQUIRED TO ATTACH CANOPY FRAMING TO SUPER STRUCTURE SHALL BE SHOWN IN THE SHOP DWGS. ENGINEER, FABRICATE AND ERECT THE CANOPY FRAMING TO WITHSTAND THE DESIGN LOADS AS SHOWN ON THE STRUCTURAL SHEET S0.10

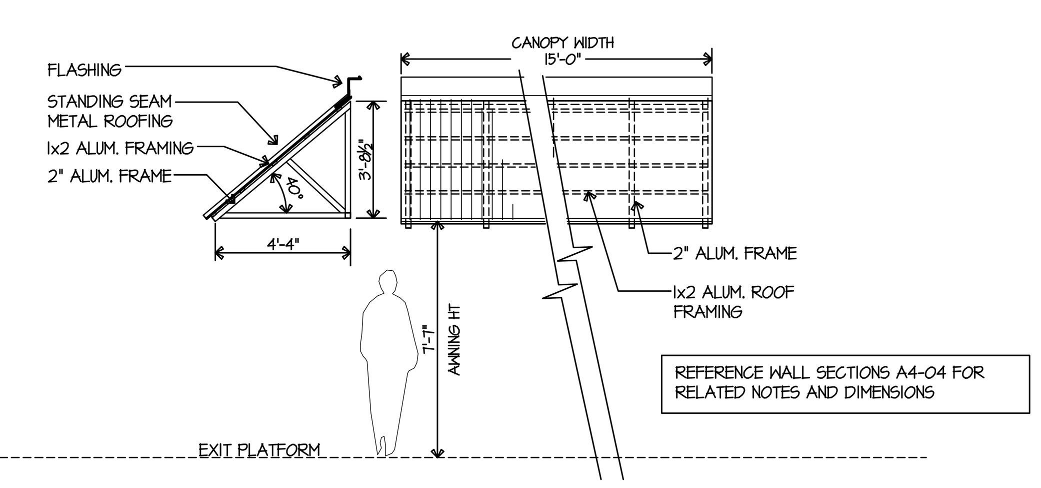

REFERENCE WALL SECTIONS A4-04 FOR RELATED NOTES AND DIMENSIONS

A6-09 SHED CANOPY/METAL AWNING

SCALE: 1/4" = 1'-0"

REFERENCE SPEC SECTION 10000 FOR METAL AWNINGS.

VERTICAL GIRTS with HORIZ @ TOP & BOTTM AS INDICATED ON STRUCTURAL

A6-04 WINDOW STRUCTURAL FRAMES

SCALE: 1/4" = 1'-0"

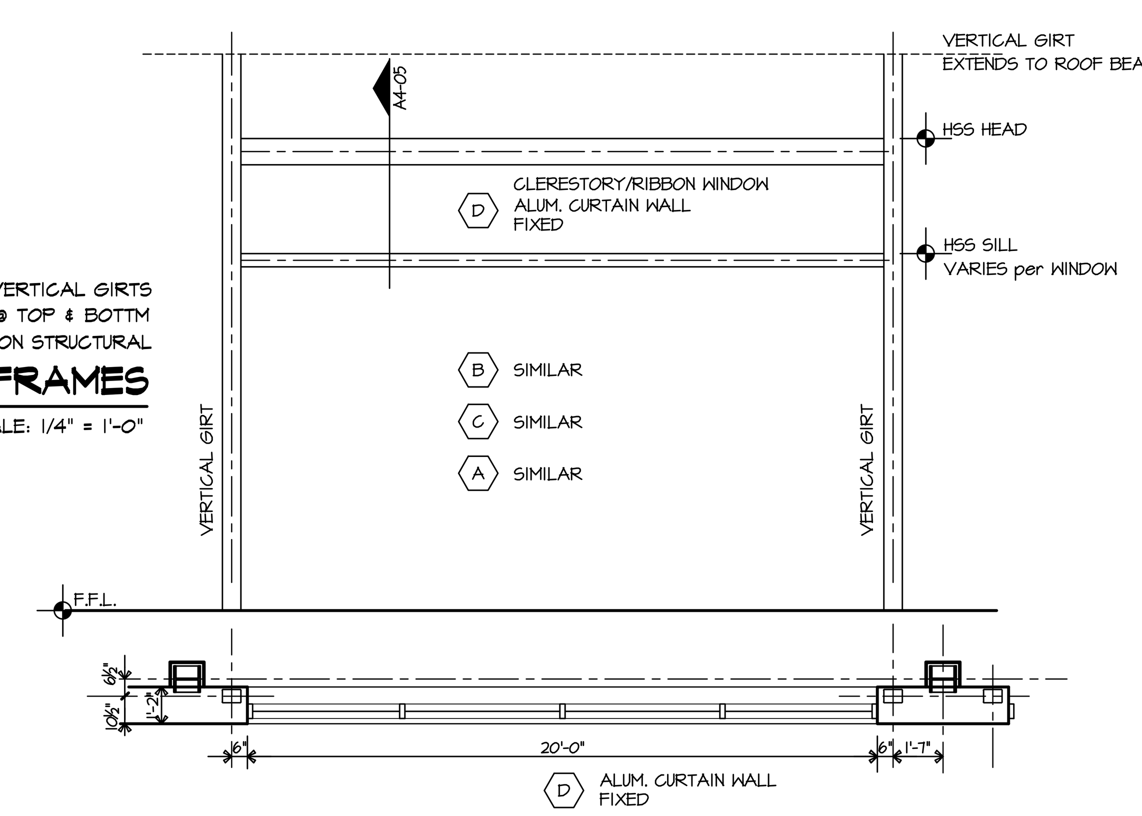

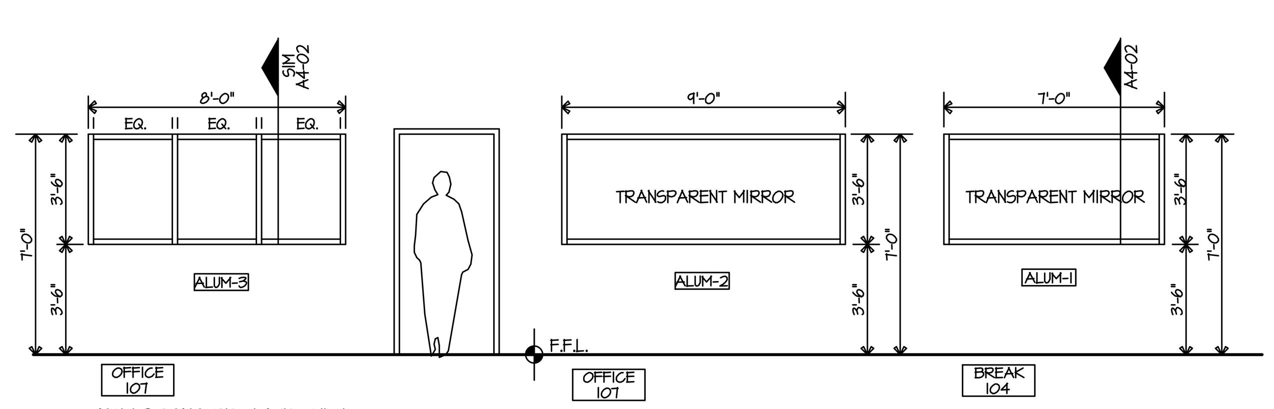

ALUM-3 SHALL BE GLAZED WITH SAFETY GLAZING (CATEGORY II)

A6-08

INTERIOR - ALUMINUM FRAME WINDOWS
WINDOW TYPES

SCALE: 1/4" = 1'-0"

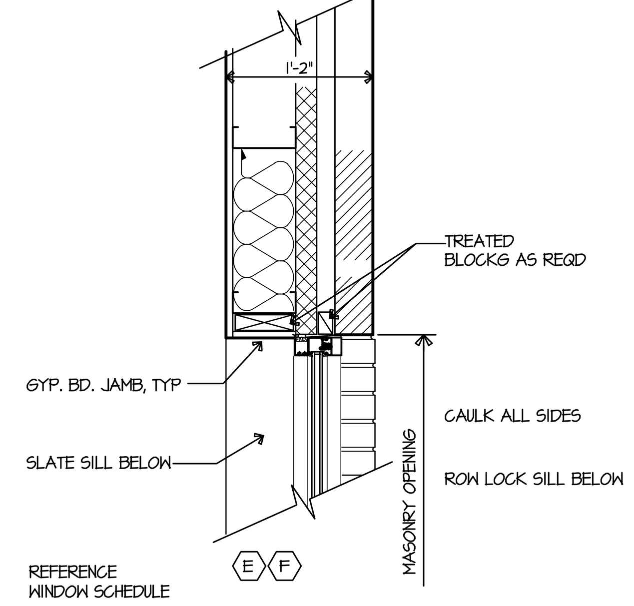

A6-07

EXTERIOR - ALUM. STOREFRONT
WINDOW JAMB

SCALE: 1" = 1'-0"

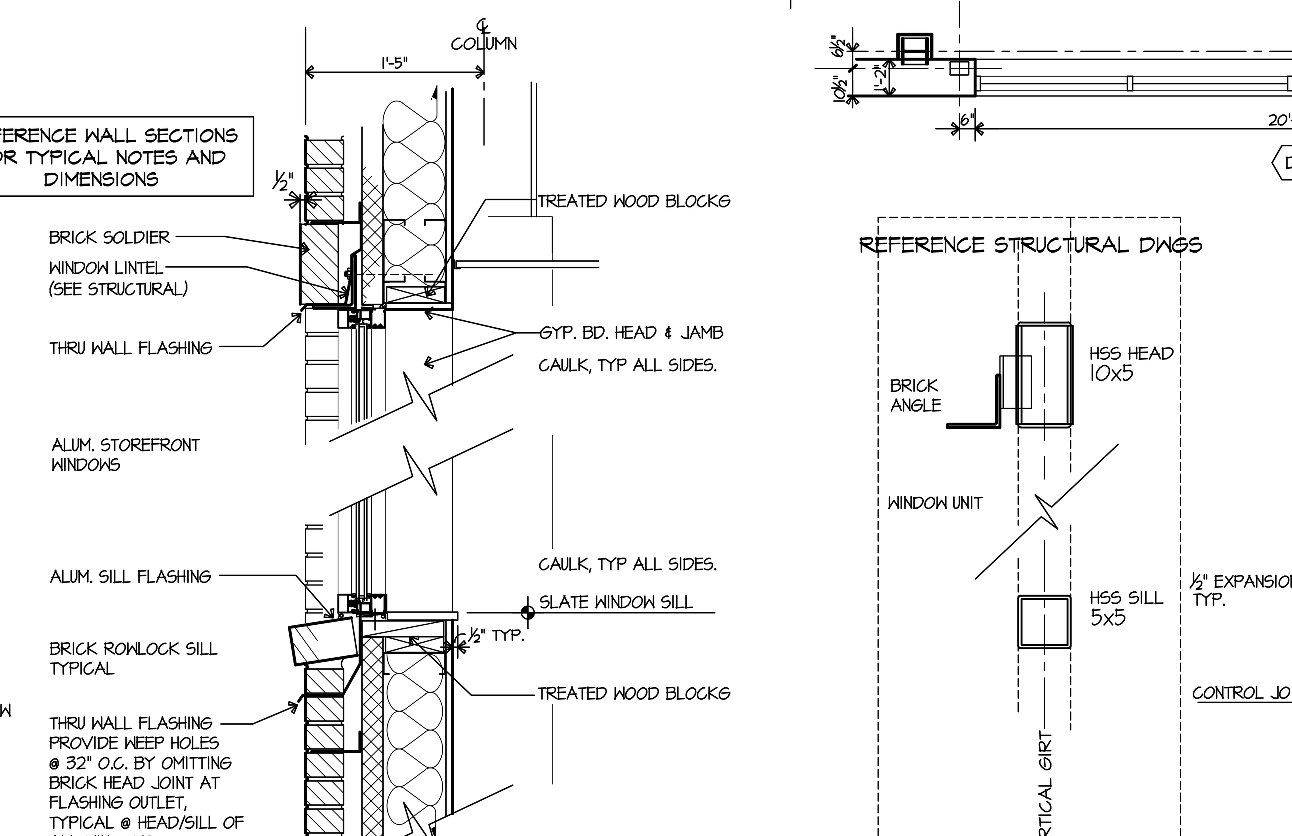

A6-06

EXTERIOR - ALUM. STOREFRONT
WINDOW HEAD/SILL

SCALE: 1" = 1'-0"

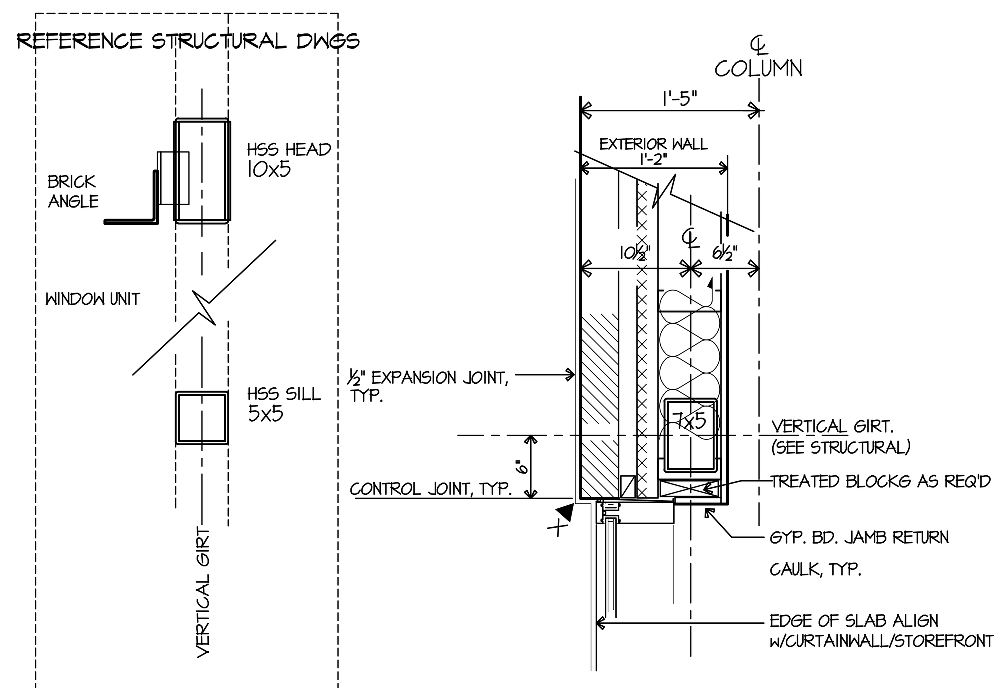

A6-05

EXTERIOR - ALUM. CURTAIN WALL
WINDOW JAMB

SCALE: 1" = 1'-0"

RAMSAY BURGIN SMITH ARCHITECTS
225 NORTH MAIN STREET - SUITE 501
SALISBURY, NORTH CAROLINA 28144
Phone: (704) 633-3121 Fax: (704) 633-5361
Email: rbsa@rbsarch.com (www.rbsarch.com)

PUBLICATION OR REUSE OF THESE DRAWINGS OR ANY DETAILS THEREFROM MUST BE WITH THE WRITTEN CONSENT OF THE ARCHITECT

DOORS & WINDOWS

Rowan/Kannapolis ABC STORE & WAREHOUSE
Salisbury, NC

WILLIAM R. BURGIN REGISTERED ARCHITECT 3513 NORTH CAROLINA SALISBURY, N.C.

DRAWN BY	DJG
CHECKED BY	WRB
DATE	DEC 2016
COMM. NO.	S1613

SHEET NO. A6 OF 6